ODYUSA™
INNOVATIVE DESIGNS

ODYSSEY MEDIA DJ BOOTH

SKU: **DJBOOTHM46**

ASSEMBLY INSTRUCTIONS

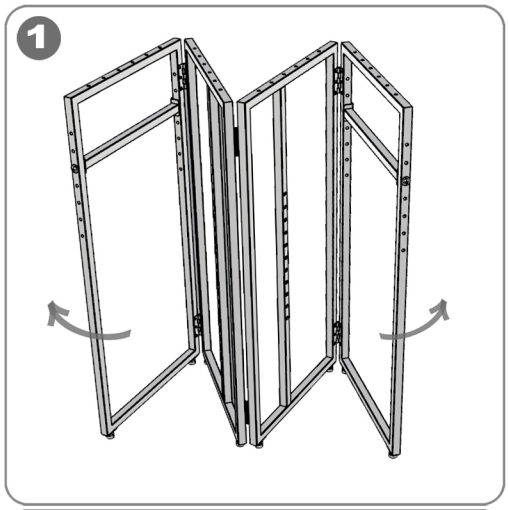

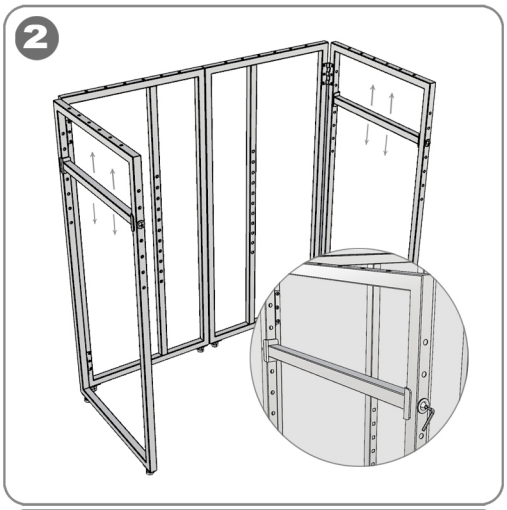

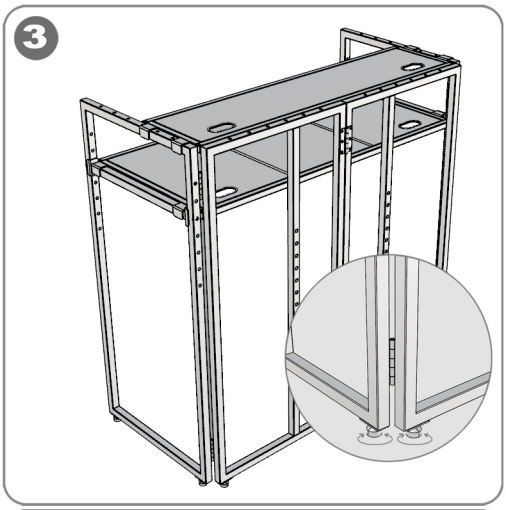

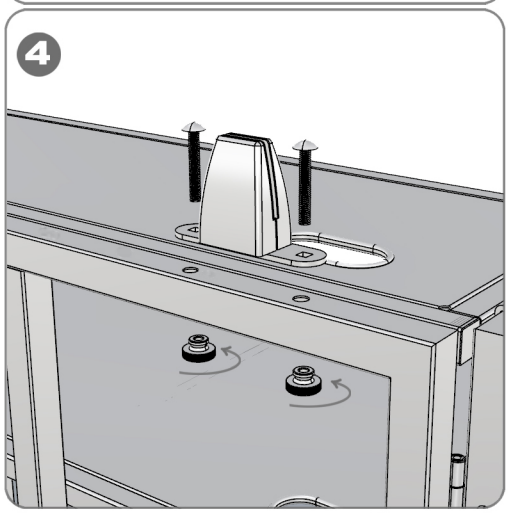

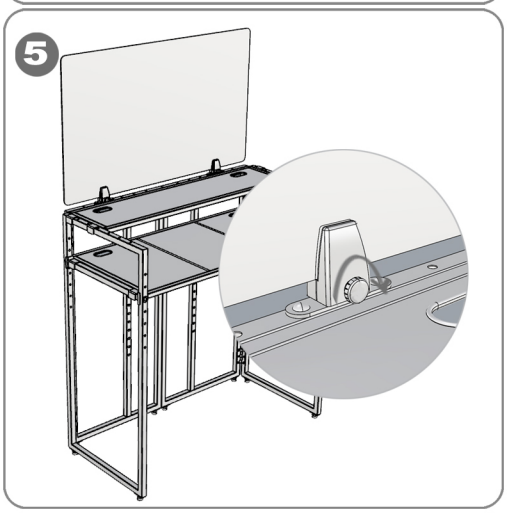

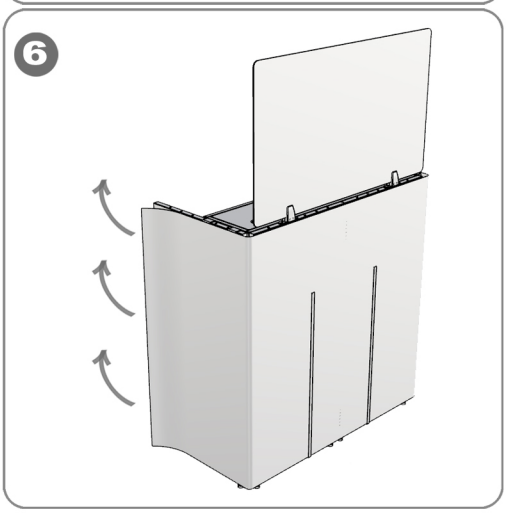

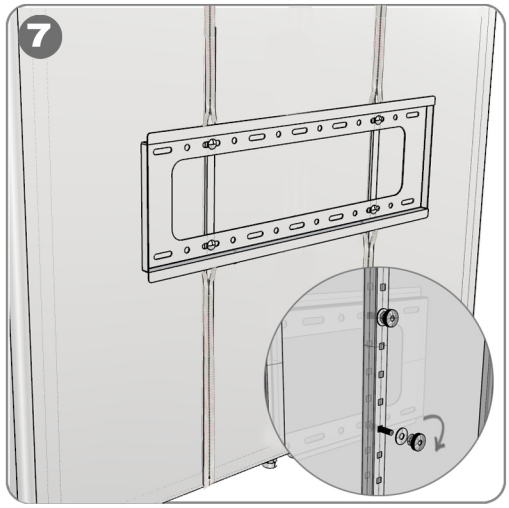

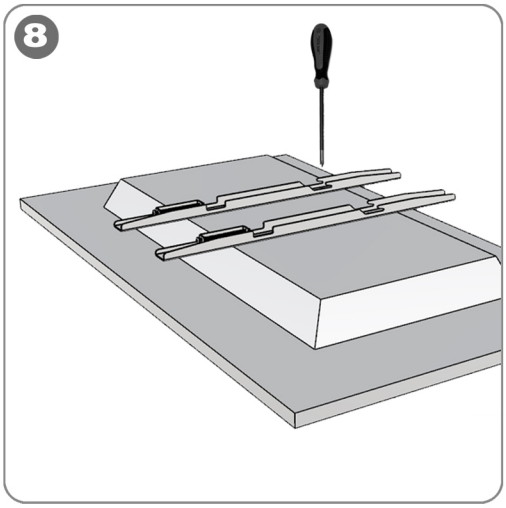

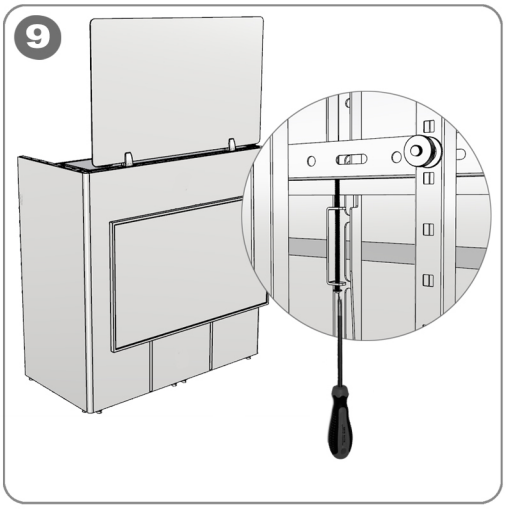

www.OdysseyGear.com